EURORAMA
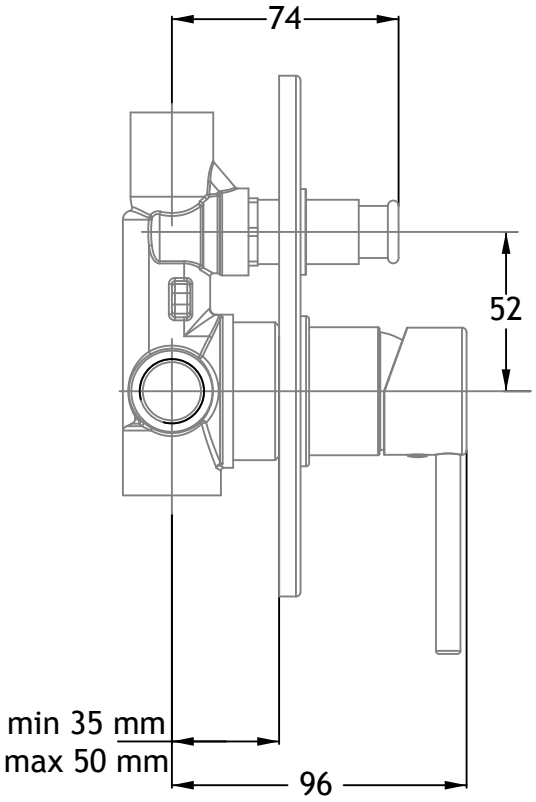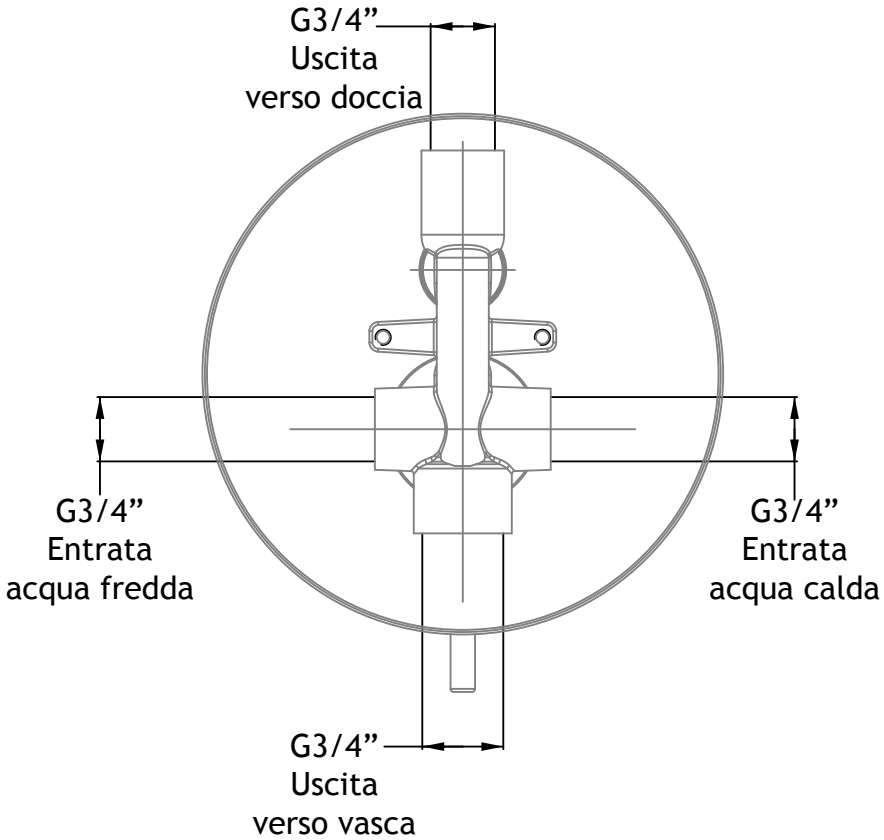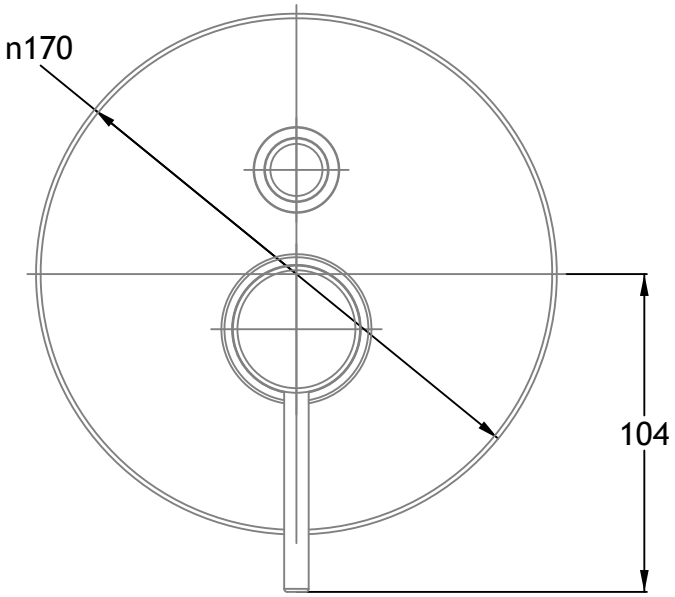
Tonda 145030