SCHEDA TECNICA TECHNICAL FEATURES

ART. COD. K5560

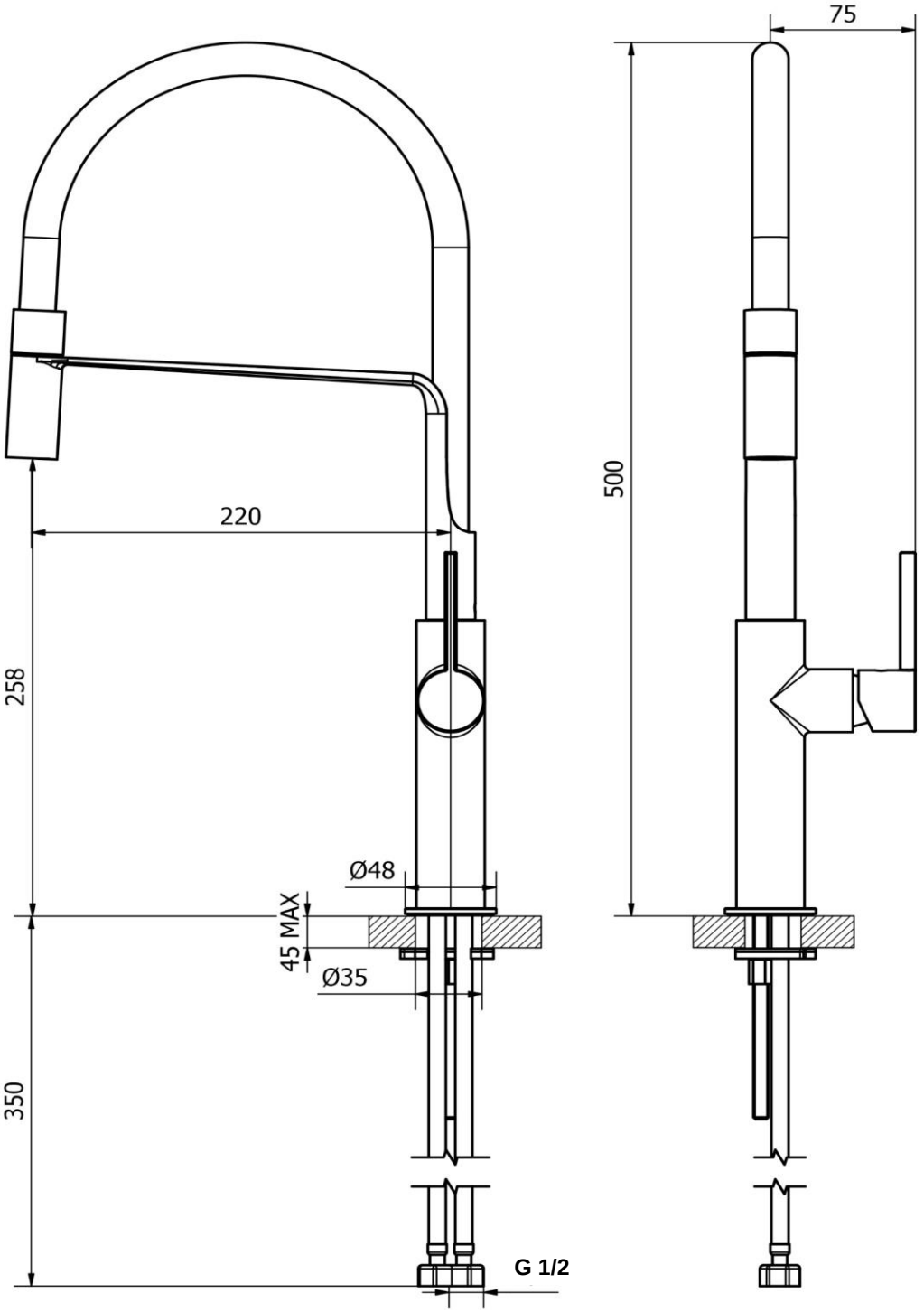

MATERIALI / MATERIALS

OTTONE CROMATO / CHROME PLATED BRASS

CROMATURA / CHROME PLATING

UNI EN 248

Via L. Galvani 8 - 25064 Gussago (BS) Italy Tel. +39-030 320680
info@pentagonosrl.it www.pentagonosrl.it