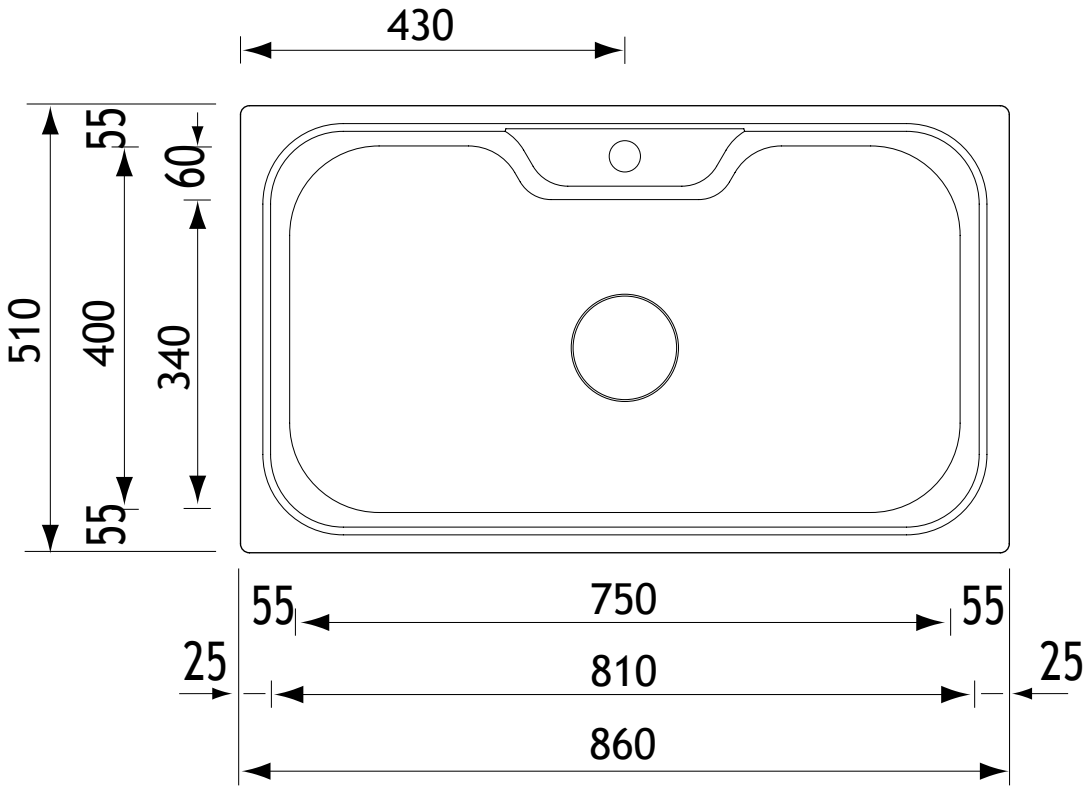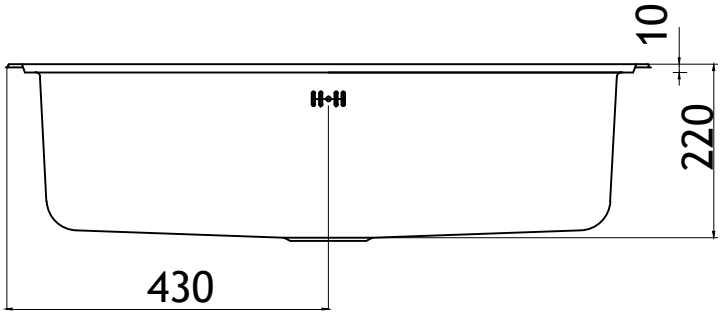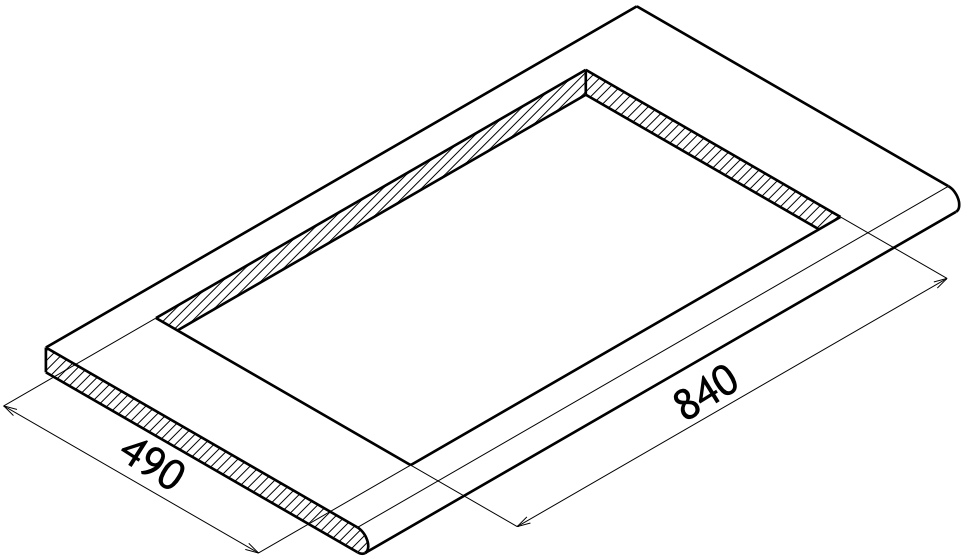CRITERIA CR860